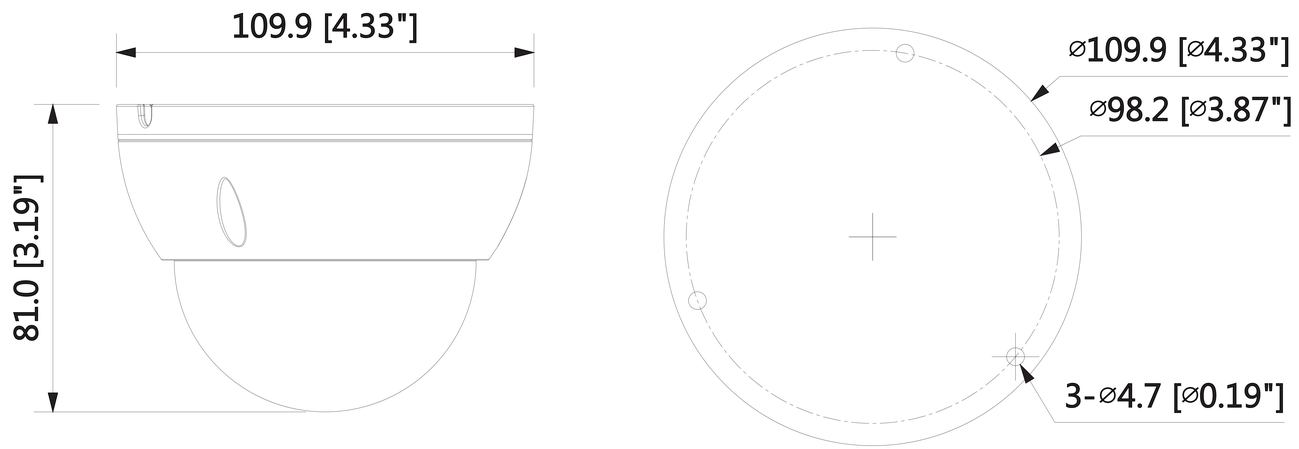
109.9 [4.33"]
81.0 [3.19"]
⌀109.9 [⌀4.33"]
⌀98.2 [⌀3.87"]
3-⌀4.7 [⌀0.19"]