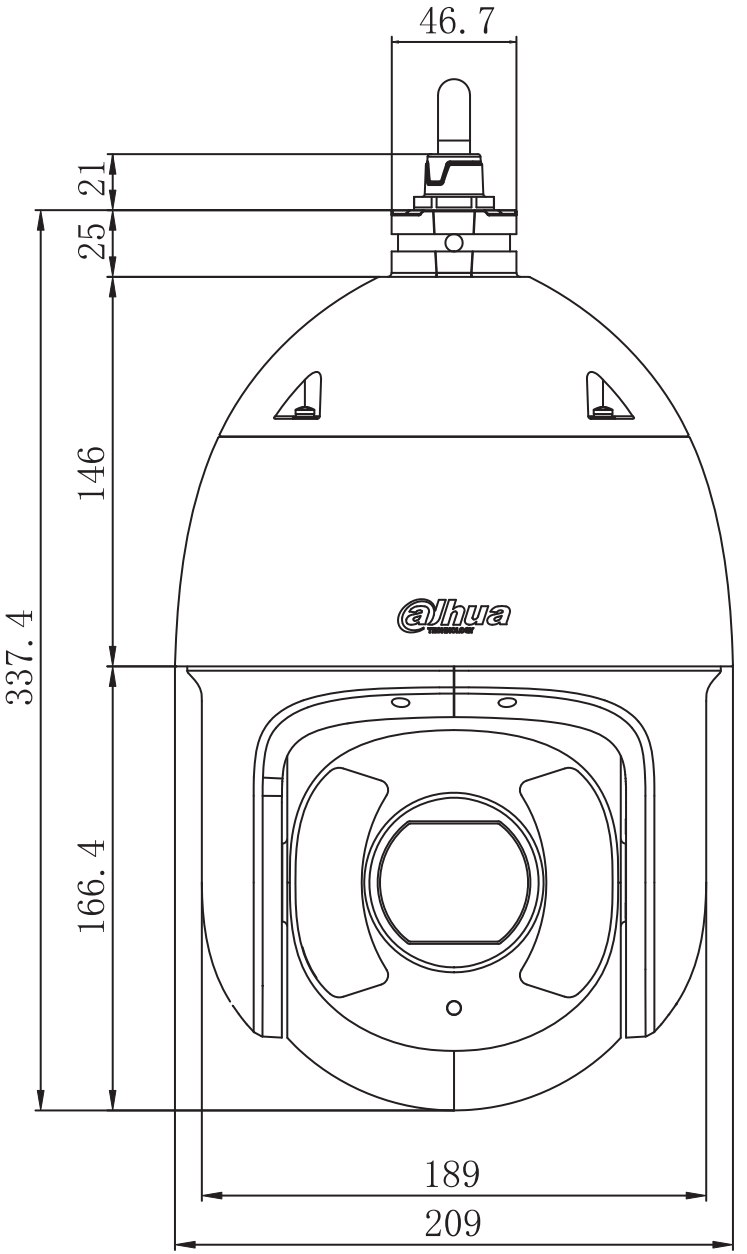
46.7
21
25
146
337.4
166.4
189
209

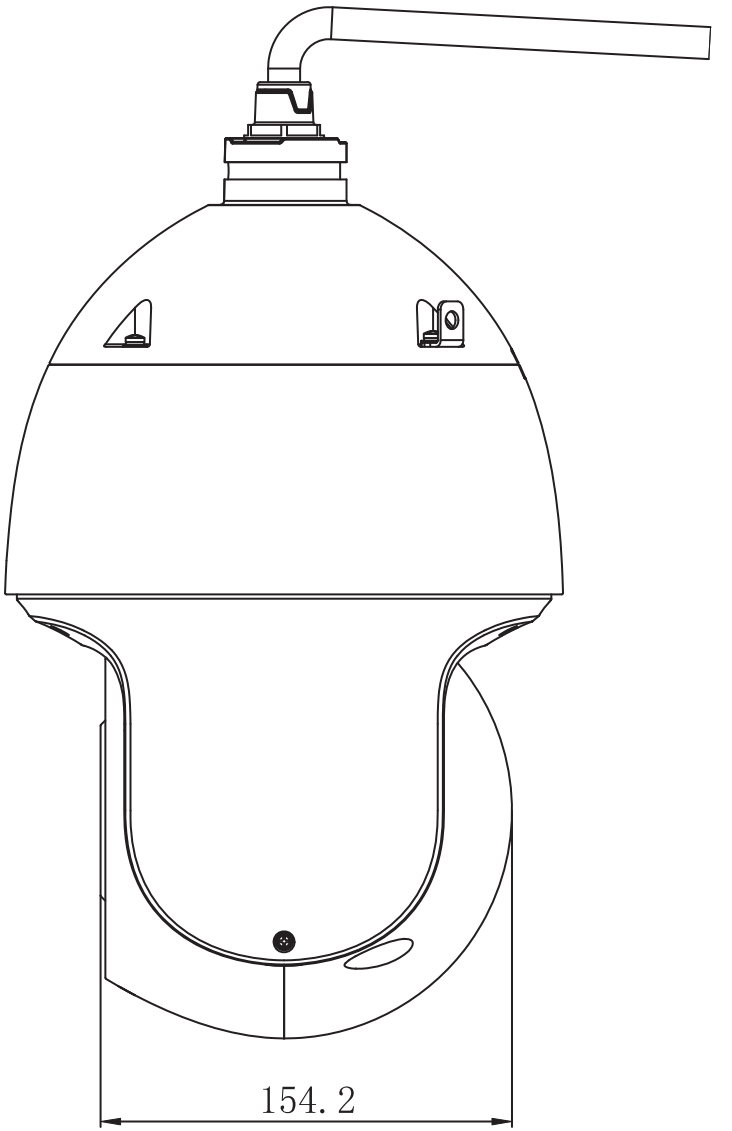
154.2