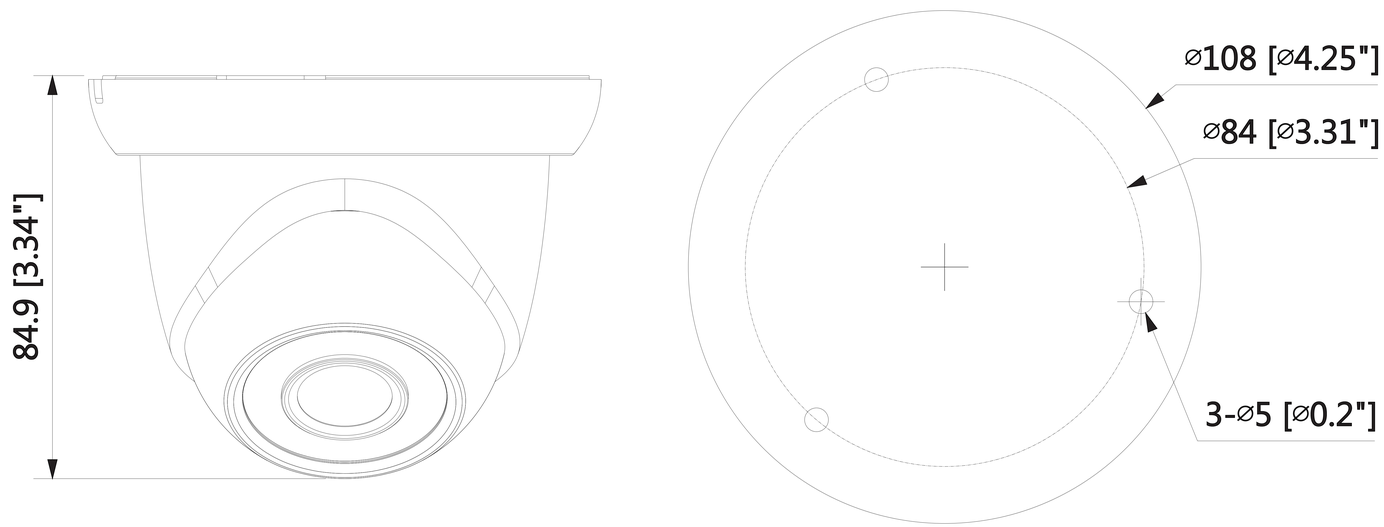
84.9 [3.34"]
⌀108 [⌀4.25"]
⌀84 [⌀3.31"]
3-⌀5 [⌀0.2"]