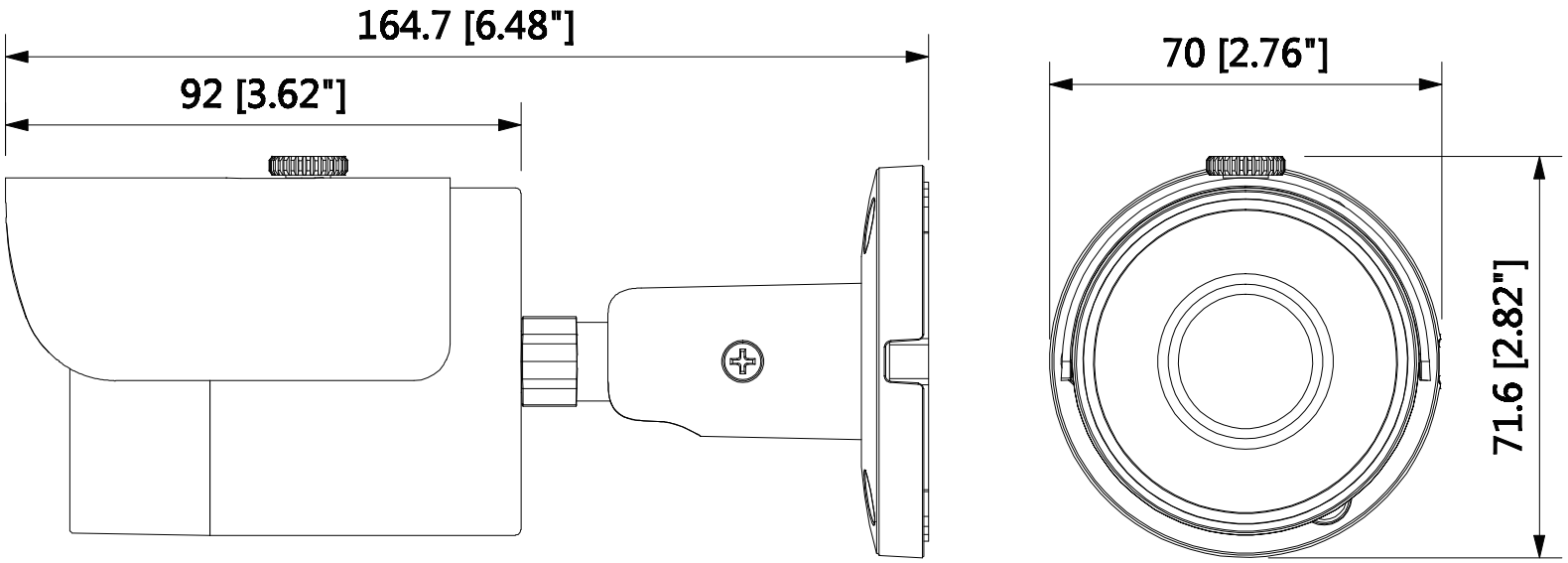
164.7 [6.48"]
92 [3.62"]
70 [2.76"]
71.6 [2.82"]