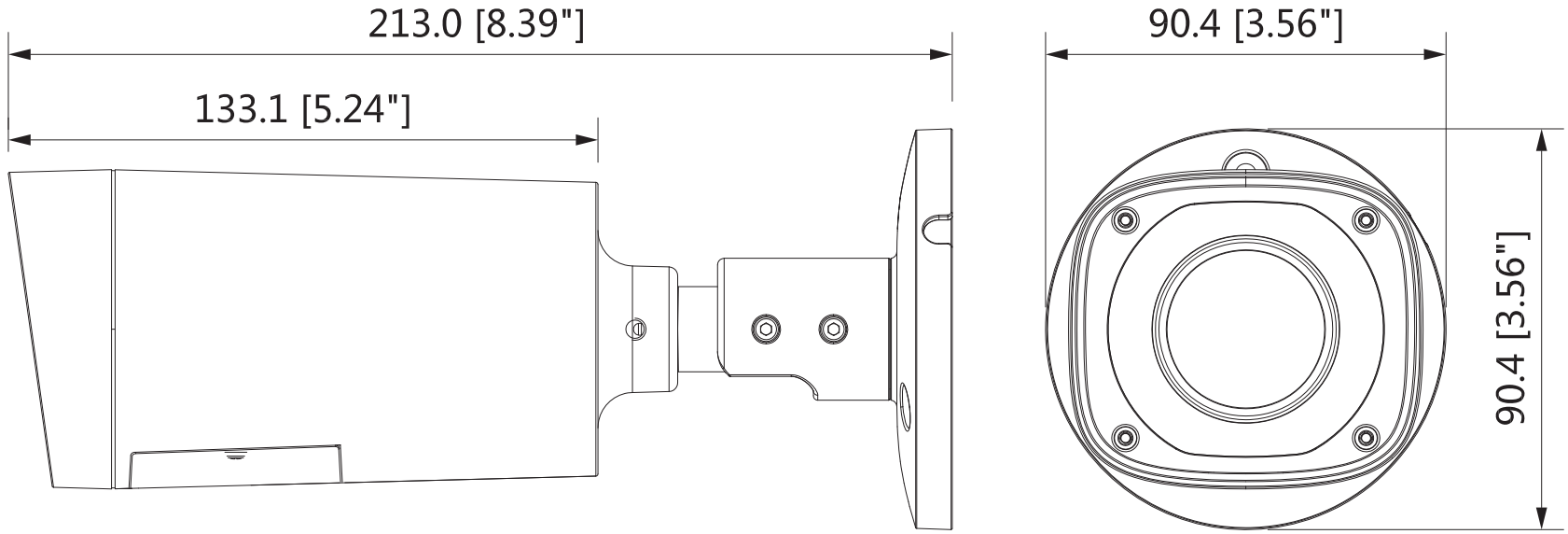
213.0 [8.39"]
133.1 [5.24"]
90.4 [3.56"]
90.4 [3.56"]