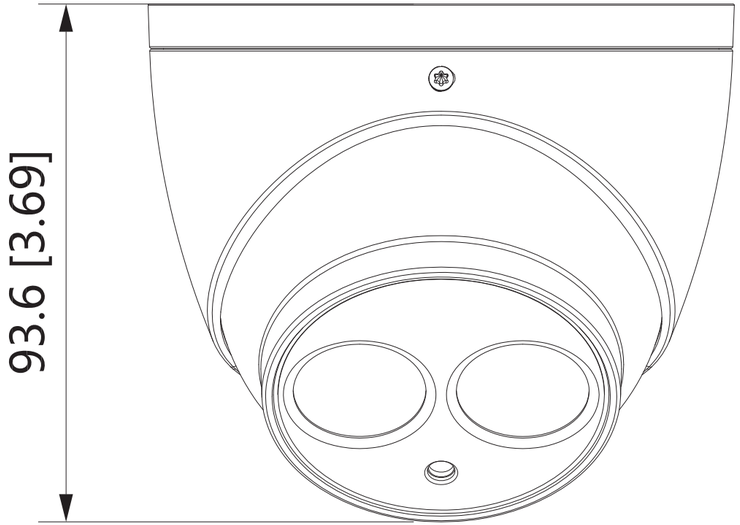
93.6 [3.69]

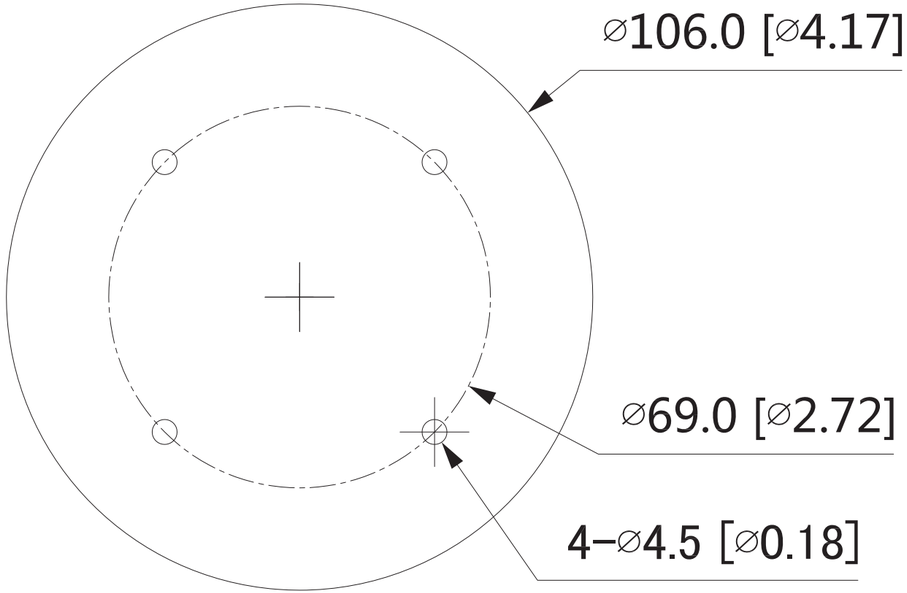
⌀106.0 [⌀4.17]
⌀69.0 [⌀2.72]
4−⌀4.5 [⌀0.18]